LHM-50MGE Aluminum horn Loudspeaker, 50W

Horn Mid Level

- Powerful 50 W compression driver
- Ruggedized and compact housing made of aluminum and PPE, IP66 rated
- Stainless steel smart bracket for easy and quick installation
- Built-in option for PRA-EOL and PRA-EOB
- EN 54-24 certified

This ruggedized and high-efficient 50 W horn loudspeaker, provides excellent speech reproduction and sound distribution for high noise areas with challenging environmental circumstances. A great fit for industrial, transportation and marine/offshore* applications.

Construction
The LHM-50MGE is a round shaped 50 W horn loudspeaker, made from powder coated aluminum combined with a strong PPE back can. The smart bracket for easy installation is made of powder coated stainless steel. The housing color is light grey (RAL 7035), and is IP66 water and dust protected.
** The LHM series is designed to withstand salt-mist environments, according to IEC60068-2-11.*

Functions

Voice Alarm
The LHM-50MGE is designed for voice alarm and public address applications. The loudspeaker is EN54-24 certified and compliant to BS 5839-8 and EN 50849.

Protection
The LHM-50MGE has a built-in protection to ensure that fire damage to the loudspeakers does not cause failure of the connected circuit. In this way system integrity is maintained, ensuring loudspeakers in other areas can still be used to inform people of the situation.
It has a provision to build in the loudspeaker line monitoring boards PRA-EOL or PRA-EOB.

Connection
The loudspeakers have a ceramic screw-terminal connection block, thermal fuse and heat-resistant, high-temperature wiring.

Regulatory information

Regulatory information
All Bosch loudspeakers are designed to withstand operating at their rated power for 100 continuous hours in accordance with IEC 60268-5 Power Handling Capacity (PHC) standards. This ensures improved reliability under extreme conditions, leading to higher customer satisfaction and longer operating life and lessen the chance of failure or performance deterioration.

Safety	EN 62368-1:2014+A11 IEC 62368-1:2018 Ed.3
Emergency	EN 54-24
Corrosion resistance	IEC 60068-2-11
Water and dust protection	EN 60529 IP66

Region	Regulatory compliance/quality marks
Europe	DoP
	CE
UAE	UAE CoC

Installation/configuration notes

Mounting

The smart bracket makes it possible to use electronic tools for mounting without removing the bracket. The mounting holes are easily accessed. The horn is designed for surface mounting. The bracket can tilt or rotate to fit in any application, wall- or ceiling-mount. The back box has a pre-fixed gland and a knock-out hole for an optional second gland for loop-through connections.

Terminal block

The horn has a three-way ceramic terminal block with screw connection and thermal fuse. Three primary taps are provided on the matching transformer to allow selection of nominal full-power, half-power, or quarter-power radiation, in 3 dB steps.

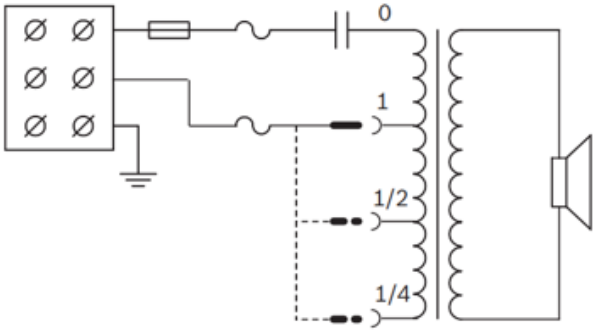

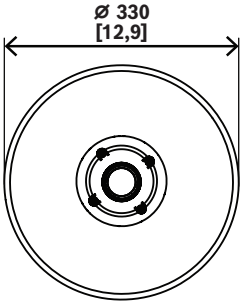

mm
[in]

Fig. 1: Front view dimensions

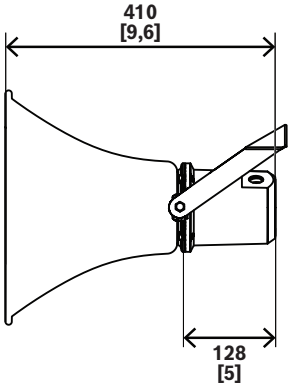

mm
[in]

Fig. 2: Side view dimensions

Parts included

Quantity	Component
2	LHM-50MGE Aluminum horn Loudspeaker, 50 W
1	Quick installation guide

Technical specifications

Acoustic*

Rated power (W)	50 W
Transformer taps 100 V line (W)	50 W; 25 W
Transformer taps 70 V line (W)	50 W; 25 W; 12.5 W
Rated input voltage (V)	70 V; 100 V
Connector type	3-pole ceramic
Wire gauge	0.85 mm^2 - 2.5 mm^2 AWG 18 - AWG 14
Sensitivity (1 W, 1 m, 1 kHz Octave) (dB)	111.7 dB
Sensitivity (1 W, 1 m, 100 Hz - 10 kHz) (dB)	106.7 dB
Sensitivity (1 W, 4 m, 100 Hz - 10 kHz) (dB), acc. EN54-24	89 dB
SPL (Rated power, 1 m, 1 kHz Octave) calculated (dB)	128.7 dB
SPL (Rated power, 1 m, 100 Hz - 10 kHz) calculated (dB)	123.7 dB
SPL (Rated power, 4 m, 100 Hz - 10 kHz) (dB), acc. EN54-24	103.5 dB
Effective frequency range (1 kHz Octave, -10 dB)	501 Hz - 5.6 kHz
Effective frequency range (100 Hz - 10 kHz, -10 dB)	331 Hz - 6.04 kHz
Coverage angle HxV (-6 dB, 500 Hz) (°)	144° x 144°

Coverage angle HxV (-6 dB, 1 kHz) (°)	90° x 90°
Coverage angle HxV (-6 dB, 2 kHz) (°)	45° x 45°
Coverage angle HxV (-6 dB, 4 kHz) (°)	24° x 24°
Transducer impedance (Ω)	12 Ω
Rated impedance 70 V line (Ω)	392 Ω @12.5 W
	196 Ω @25 W
	98 Ω @50 W
Rated impedance 100 V line (Ω)	800 Ω @12.5 W
	400 Ω @25 W
	200 Ω @50 W

*Technical performance data acc. to IEC 60268-5

Note:

• The specification data was measured in an anechoic chamber, free-field.

• The reference plane is on the front hole surface and perpendicular to the reference axis.

• The reference axis is perpendicular to the center point of the front hole surface.

• The horizontal plane contains the reference axis and is perpendicular to the reference plane.

Mechanical

Dimensions (Ø x D) (mm)	330 mm x 410 mm
Dimensions (Ø x D) (in)	12.99 in x 16.14 in
Weight (kg)	2.65 kg
Weight (lb)	5.84 lb
Material	Bell: Aluminum Back can: PPE Frame support ring: Aluminum Smart bracket: Stainless steel
Color (RAL)	RAL 7035 Light gray

Environmental

Operating temperature (°C)	-25 °C – 70 °C
Operating temperature (°F)	-13 °F – 158 °F
Storage temperature (°C)	-40 °C – 70 °C
Storage temperature (°F)	-40 °F – 158 °F
Operating relative humidity, non-condensing (%)	0% - 95%

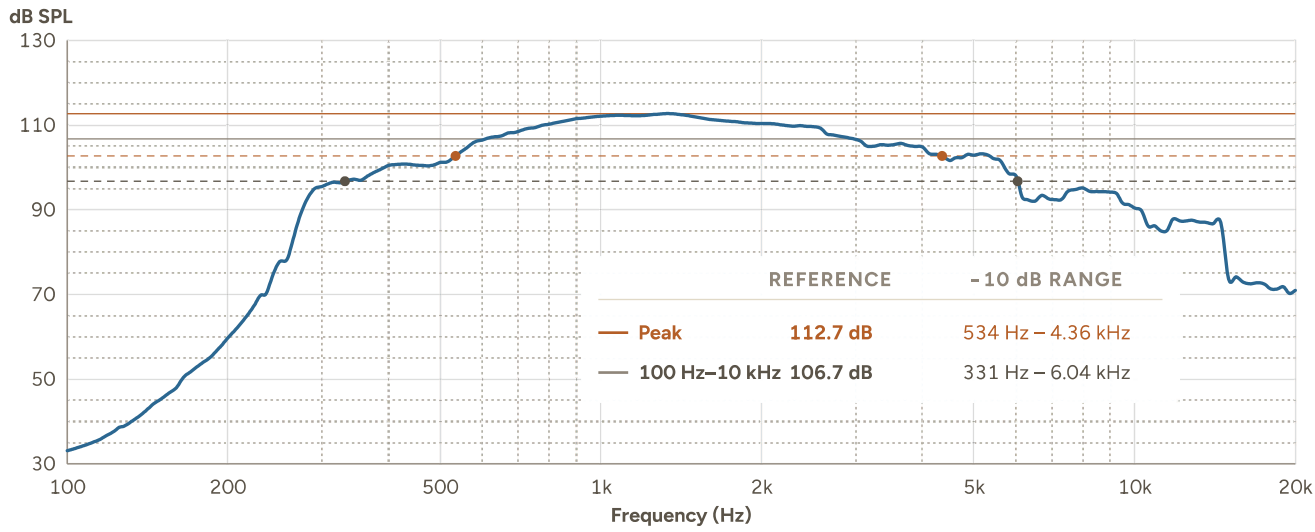

Frequency response — SPL @ 1 W, 1 m, running 1/3-octave smoothing (each point averaged over ±1/6 octave), plotted 100 Hz – 20 kHz. Effective range from the peak and the energy-averaged (RMS pressure) reference over 100 Hz–10 kHz. NOTE: dips <1/9 octave disregarded per IEC 60268-5.

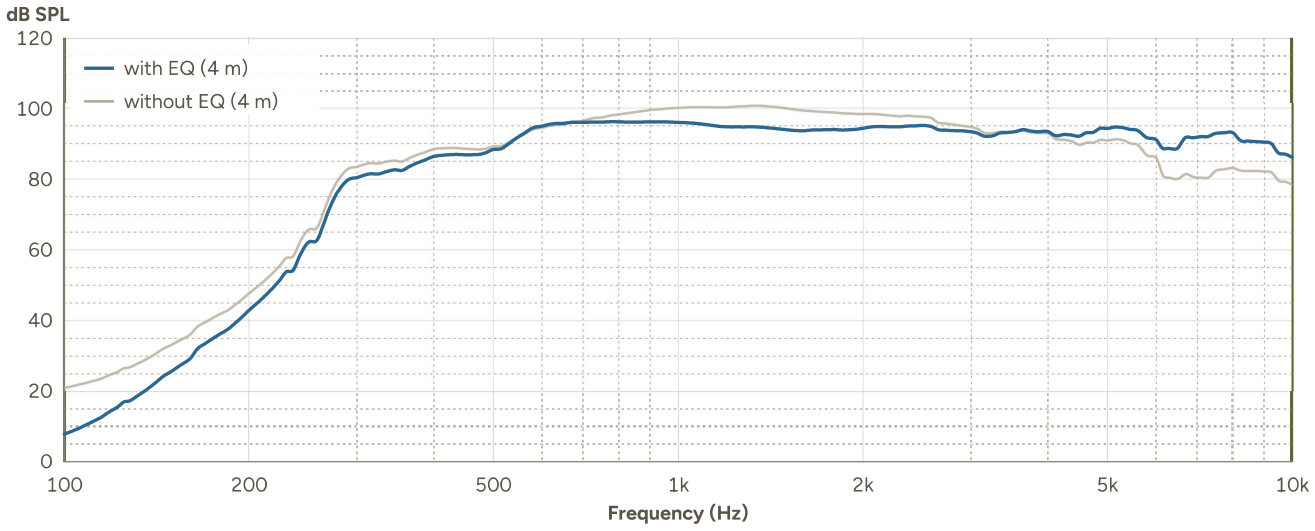

Frequency response — SPL @ 1 W, 4 m (calculated, EN 54-24), running 1/3-octave smoothing (each point averaged over ±1/6 octave), with the design EQ applied. Light grey trace shows the same 4 m calculation without EQ. EN 54-24 bandwidth limits marked at 100 Hz and 10 kHz.

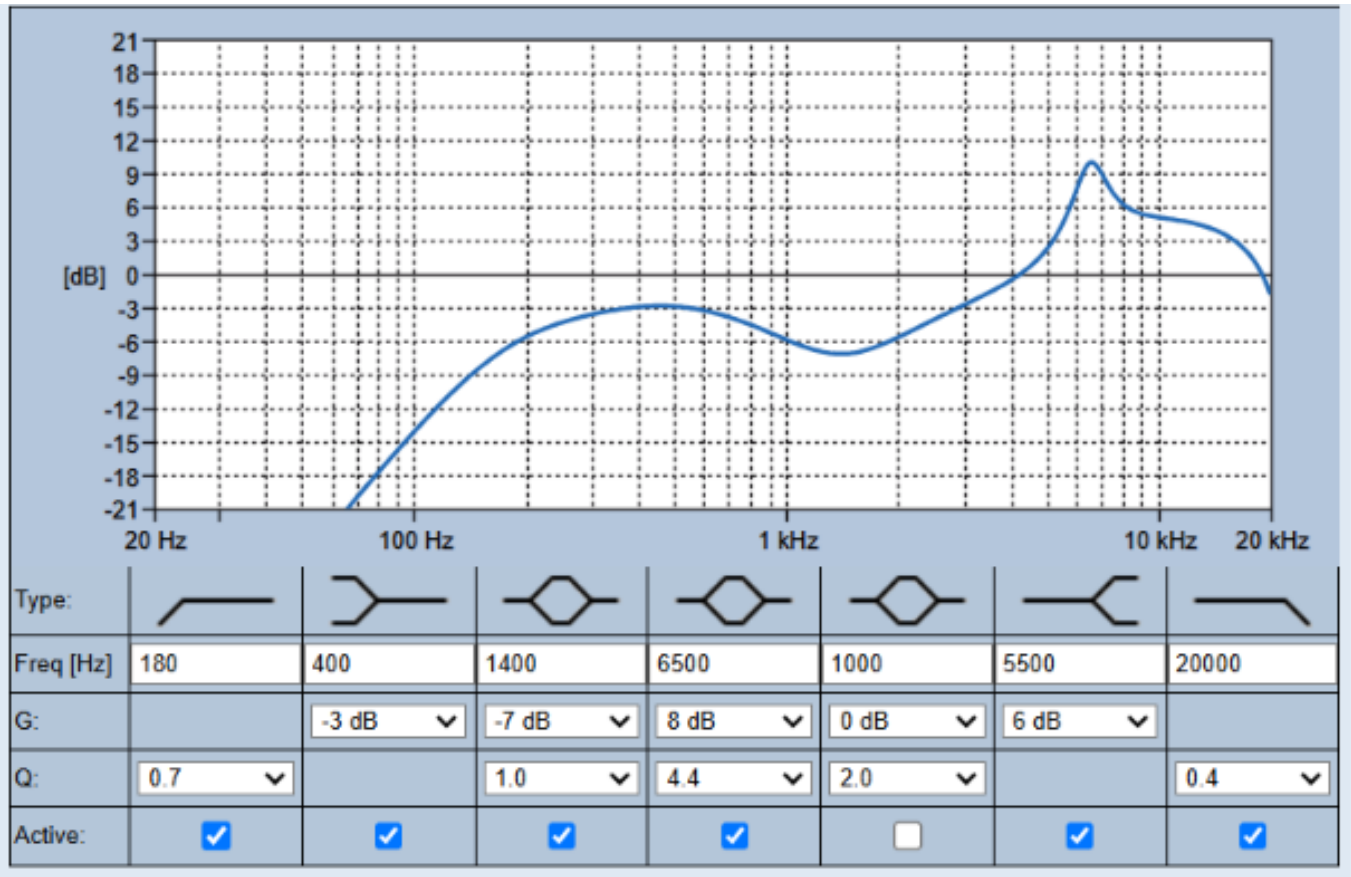

Fig. 3: Specified active equalization, required for EN54-24

Ordering information

LHM-50MGE Aluminum horn Loudspeaker, 50W
50 W Horn Loudspeaker, EN 54-24 certified, IP66, aluminum/PPE housing.
Order number **LHM-50MGE | F.01U.430.315**

https://www.keenfinity-group.com

© Electro Voice Dynacord 2026